CW-TAL 29-A0 Size 1 Three Phase

Industrial water chillers

OSC 322

COOLING CAPACITY **2900 - 3600 - 4550 - 6000 - 8100 - 9550 - 10900 W**

AIR CONDENSER
Finned high-efficiency copper tube condensing coil, complete with safety grille.

AXIAL FAN
Axial fan, complete with thermal cut-out and safety grille.

LIQUID CIRCUIT
Non-ferrous liquid circuit composed of centrifugal electric pump, plastic storage tank complete with visual level indicator, 0-10 bar pressure gauge, protective flow switch, regulation sensor.

ELECTRICAL PANEL
With main disconnect switch, relay motor protection, phase sequence relays.

MANAGEMENT AND CONTROL
The TX110 control unit manages the chiller's operation, providing warnings including high/low temperature alarms and a general serious fault alarm, with the display indicating if this refers to the refrigeration or liquid circuit. An on-off contact allows the machine to be switched on remotely (pump included). Control disconnect switch for switching on the machine.

STRUCTURE
In powder-coated steel sheet, RAL 7035 textured finish. Easily removed panels

COMPRESSOR
Hermetic reciprocating or scroll compressor, cooled by the refrigerant, complete with thermal cut-out.

REFRIGERATION CIRCUIT
Complete with charging port, drier filter, capillary or thermostatic valve, high-pressure safety pressure switch, R134a refrigerant.

EVAPORATOR
Brazed stainless-steel plate model.

PAINT/COATING
Standard colour: RAL 7035 textured.

MAIN ACCESSORIES (ref. page 189)
BA - Mechanical bypass valve protecting the pump
LTA - Operation at low ambient temperatures
FP - Polyurethane air filter
RU - Castors
TD - Differential fluid temperature management (two sensors)
BGC - Hot gas bypass for +/- 1 K temperature precision
BGP - Hot gas bypass for +/- 0.5 K temperature precision
LS - Liquid circuit for laser application
UL1 - UL certified electrical panel and components
LTW - -10 - +5 water temperature range
- HIGH-pressure pump version "H" - 5 bar, version "R" - 7 bar.
- Outdoor installation optionals

Dimensions

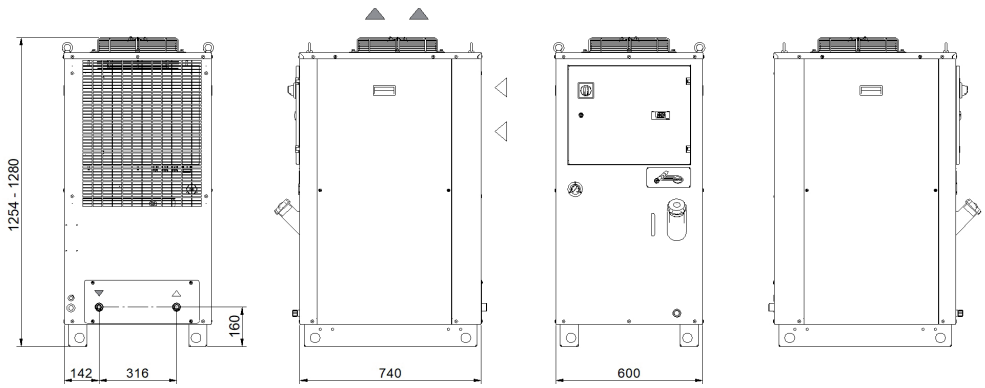

ORELL

www.orelltec.com

Model		CW-TAL29	CW-TAL37	CW-TAL46	CW-TAL57	CW-TAL76	CW-TAL93	CW-TALA0
Rated Cooling Capacity*	W	2900	3600	4550	6000	8100	9550	10900
Ambient temperature operating limits	°C	+15 - +45						
Settable fluid temperature range	°C	+8 - +25						
Fluid type		Water						
Temperature precision	K	+/-2						
Refrigerant gas	HFC	R134a						
Power supply								
Supply voltage	V ph Hz	400V (+/-10%) 3ph 50Hz						
Secondary supply voltage	V	230 V AC						
Digital thermostat		TX110						
Compressor								
Compressor type		Reciprocating				Scroll		
Quantity - Number of circuits	no.	1/1						
Nominal power draw	kW	0.78	1.16	1.42	2.42	2.21	2.60	2.73
Axial Fan								
Fan type		Axial						
Quantity	no.	1						
Air flow rate	m_3/h	1550	1550	1800	1800	3150	3350	4400
Centrifugal Fan (optional)								
Fan type		Centrifugal						
Quantity	no.	1						
Air flow rate	m_3/h	2100 - 2400	2100 - 2400	2100 - 2400	2100 - 2400	2100 - 2400	2100 - 2400	2100 - 2400
Available head	Pa	250						
Standard Pump								
Pump type		Centrifugal						
Quantity	no.	1						
Nominal/max fluid flow rate	l/min	8 - 40	10 - 40	12.5 - 40	16 - 40	21 - 70	26 - 70	31.5 - 70
Nominal available head	bar	3	2.9	2.8	2.7	3.1	3	2.8
High-Pressure Pump (optional)								
Pump type		Centrifugal						
Quantity	no.	1						
Nominal available head	bar	5.1	4.9	4.8	4.6	5.5	5.3	5.1
Storage tank capacity	l	50						
IN/OUT liquid connections	inch	3/4"						
Net weight (approximate)***	kg	151	153	155	160	165	170	175
Width	mm	600						
Depth	mm	740						
Height	mm	1254			1280			
Sound pressure level**	dB(A)	57	57	57	57	57	57	57

* Data relating to operation under the following conditions: intake/outlet temperature 20/15°C, water without glycol, ambient temperature 32°C.

** Sound pressure level measured in a free parallelepiped field at a distance of 1 m from the machine per ISO 3746.

*** Weight includes pallets and packaging (where provided for), with refrigerant charge, storage tank empty, axial fans.

**** The electrical data refer to cos ϕ = 0.8.

However, due to our continuous development and improvement of our products, all information is subject to change without notice.

Correction factors for calculating the cooling power													
Water outlet temperature	**Fw**	°C					**8**	**10**	**15**	**20**	**25**		
		factor					0.69	0.77	1	1.22	1.44		
Ambient Temperature	**Fa**	°C					**15**	**20**	**25**	**32**	**35**	**40**	**45**
		factor					1.26	1.2	1.11	1	0.95	0.87	0.80
Percentage glycol by weight	**Fg**	%	**0**	**10**	**15**	**20**	**25**	**30**	**35**	**40**			
		factor	1	0.96	0.95	0.94	0.93	0.91	0.90	0.88			
Cooling power = Nominal cooling power x Fw x Fa x Fg													

12.01.2021

ORELL

www.orelltec.com