BLADDER ACCUMULATORS SERIES EBV – RF – CE

STAINLESS STEEL 316/V2A / 10 - 50 L / 16 BAR

OLD 0215

Bladder accumulator in stainless steel series EBV – RF – CE

Construction
Bladder accumulator with punched screen, welded pressure vessel, all metal components in stainless steel, robust gas valve, dismountable.

Operating pressure
16 bar

Gas filling pressure P0
Up to 80% of the operating pressure, max. 12 bar.

Temperature range
Standard execution -20 °C to +100 °C.
Other temperature ranges on request.

Hydraulic fluids
Water
Other media to be specified with the order.

Mounting position
Vertical (fluid connection directed downwards) to horizontal. Leave 200 mm above the gas valve for mounting the VGU tester and pressurizer.

Fastening
Clamps with rubber inserts, see register 11 "Damper Accesories".

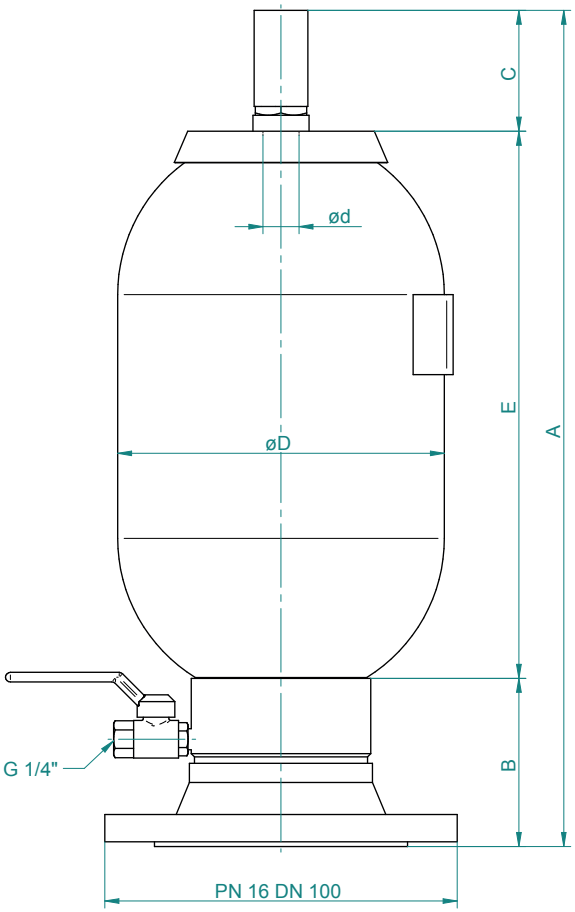

Type	Gas vol. V0 liter	Op. pressure bar	Weight kg	Q max. l/min	Dimensions in mm					
					A	B	C	ø D	ø d	E
EBV 10 – 16 / 90 – RF	8,5	16	12	900	524	105	80	206	22	339
EBV 20 – 16 / 90 – RF	18,2	16	16	900	855	105	80	206	22	670
EBV 32 – 16 / 90 – RF	34	16	22	900	1392	105	80	206	22	1207
EBV 50 – 16 / 90 – RF	50	16	29	900	1905	105	80	206	22	1720

According to the directive PED 2014/68/EC with CE marking.
Manufacturing tolerances not taken into account.

Other approvals on request.
Subject to change without prior notice.

Spare parts lists

Models: EBV 10 – EBV 50 liter

Pos.	Part
1	Bladder assembly ød*
2	Bladder
3	Gas inlet valve assembly
4	Valve cap and gasket
5	Gas inlet valve and gasket
6	Nut
7	Protective cap
8	Gland ring
9	Sieve plate
10	Snap ring
11	Ball valve

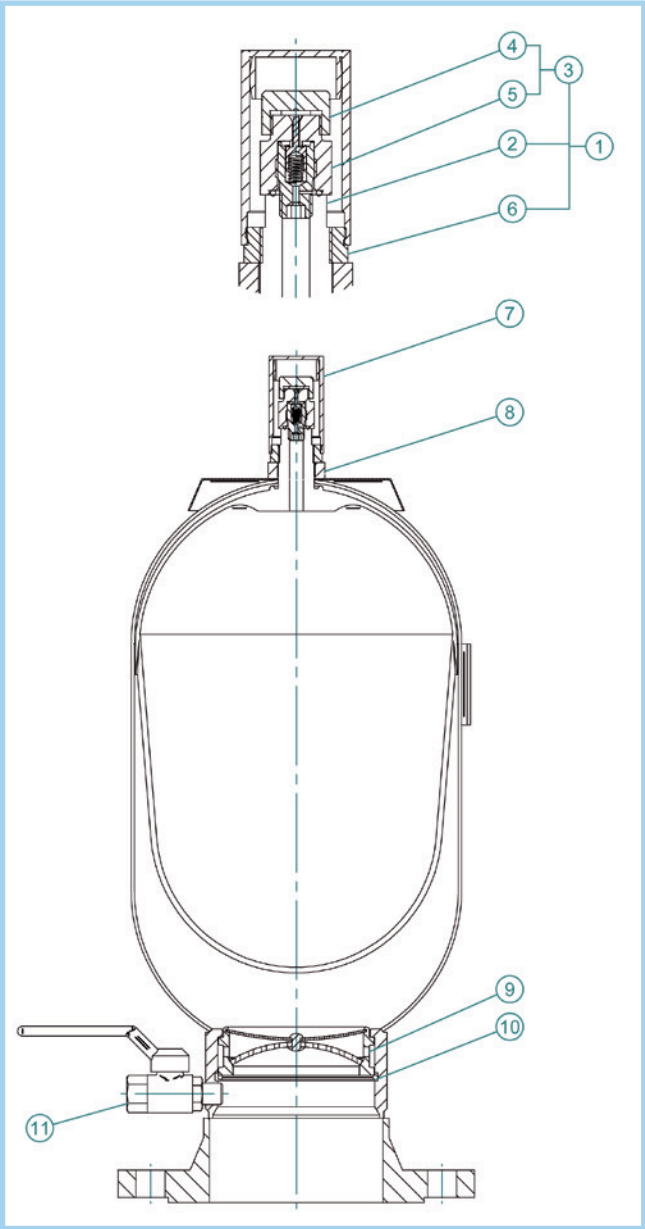

Important informations

- Certification: EBV series accumulators are manufactured, tested and documented according to the pressure equipment directive PED 2014/68/EC. Other certifications on demand.
- The technical data on the manufacturer's nameplate must be indicated on the order.
- The accumulator shell is not available as a spare part.
- Quality code used for the bladder.
- * ød should be specified at the time of ordering.

  Example:
  d = ø 22 mm EBV 10 to EBV 50